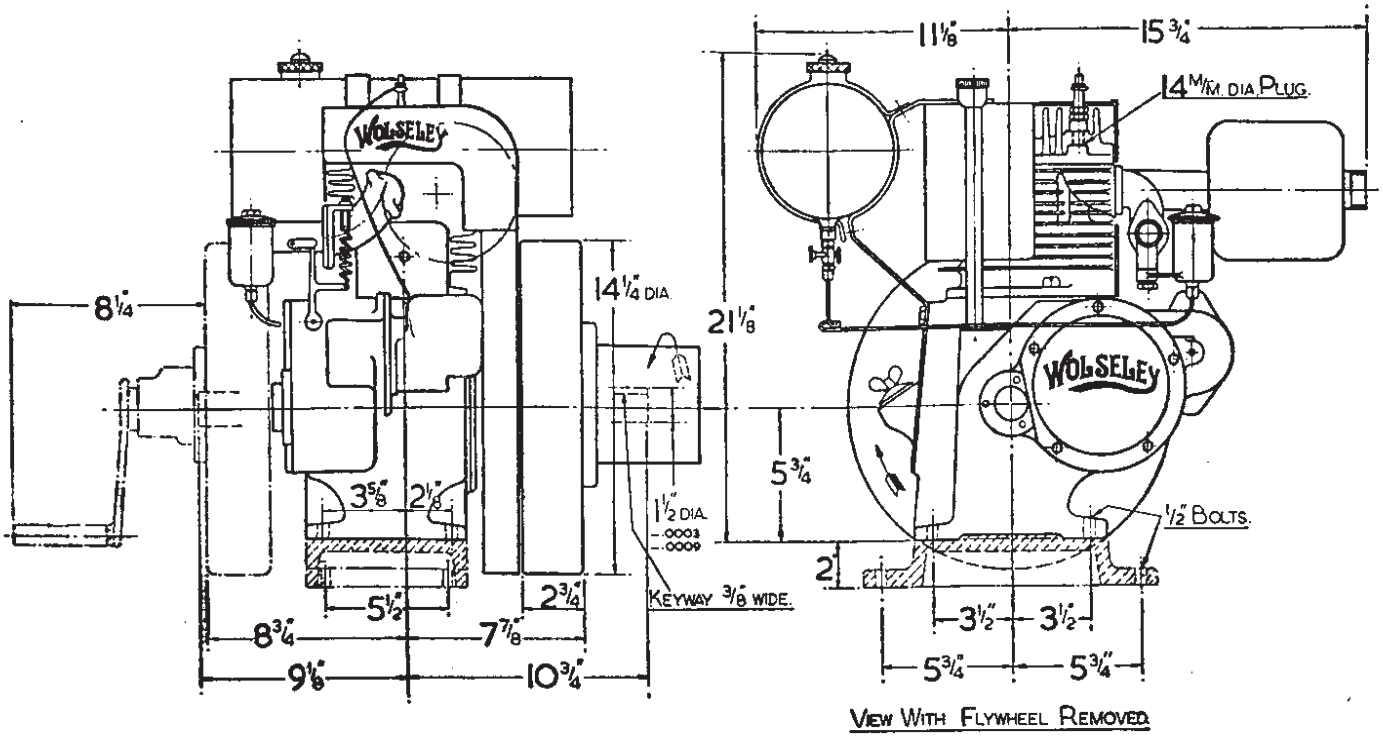

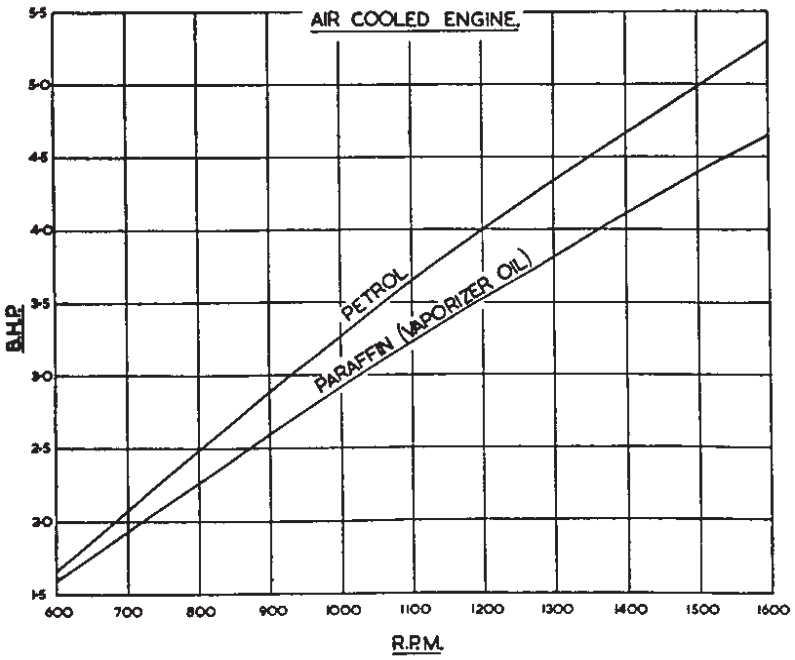

Bore	3⅝"
Stroke	3½"
Petrol Tank Capacity	11 pints
Lubricating Oil Capacity	2 pints
Std. Pulley—bolted to flywheel ...	5" dia. x 4½" wide
Special Pulley—bolted to flywheel	3½" dia. x 5" wide
Special Pulley—bolted to flywheel	8" dia. x 5" wide
Nett weight with one Standard flywheel and 5" pulley	196 lbs.
Nett weight with two Standard flywheels and 5" pulley	252 lbs.

SPARE PARTS for AIR COOLED ENGINES

DIA. No.	PART No.	DESCRIPTION
7	A.E.1	Crankcase.
7	A.E.2	Cylinder.
7	A.E.3	Combustion Head (Petrol).
–	A.E.3/PP	Combustion Head (Petrol Paraffin).
7	A.E.4	Cylinder Intake Bracket.
7	A.E.5A	Governor Lever—Carb. End.
7	A.E.6	Governor Lever—Internal.
–	A.E.8	Pulley, 4″ dia. x 5″ Face.
–	A.E.9	Pulley, 5″ dia. x 4½″ Face.
7	A.E.10	Governor Weight.
–	A.E.11	Main Bearing Oil Seal Retaining Plate.
–	A.E.12	Pulley, 3½″ dia. x 5″ Face.
–	A.E.13	Pulley, 8″ dia. x 5″ Face.
7	A.E.14	Gasket.
7	A.E.15	Jointing—Cylinder to Intake Bracket.
7	A.E.16	Tappet Cover.
7	A.E.17	Tappet Cover Jointing.
–	A.E.18	Tappet Cover Stud.
7	A.E.23	Governor Lever Spindle Oil Seal.
7	A.E.24	Governor Lever Spindle.
7	A.E.25	Governor Lever Spindle Locking Collar.
7	A.E.26	Intake Bracket to Carburettor Jointing.
–	A.E.27	Intake Bracket to Carburettor Stud.
7	A.E.28	Inlet and Exhaust Valve.
7	A.E.29	Inlet and Exhaust Valve Collar.
7	A.E.30	Inlet and Exhaust Tappet.
7	A.E.31A & B	Petrol Tank Bracket.
7	A.E.32	Governor Lever Adjusting Spring Screw.
7	A.E.33	Gov. Lever Adj. Spring Screw Nut.
7	A.E.34	Gov. Lever Adjusting Spring.
7	A.E.35	Connecting Link.
7	A.E.39	Spacer Nut.
7	A.E.40	Combustion Head to Cylinder Stud.
7	A.E.41	Cylinder to Crankcase Stud.
7	A.E.42	Valve Guide.
7	A.E.43	Governor Lever Taper Pin.
7	A.E.44	Governor Lever Locking Collar Set Screw.
7	A.E.45	Cylinder to Crankcase Jointing.
7	A.E.49	Breather Body.

DIA. No.	PART No.	DESCRIPTION
–	A.E.50	Breather Tube.
7	A.E.52	Breather Cap.
7	A.E.55 & 55A	Cylinder to Intake Bracket Stud.
–	A.E.56	Base for Crankcase (Special).
7	A.E.59	Flywheel.
7	A.E.61	Valve Spring.
–	A.E.62	Sparking Plug.
7	A.E.63	Fan.
7	A.E.64	Fan Back Plate.
7	A.E.74	Magneto Lead Guide Bracket.
–	A.E.75	Hot Air Elbow (Petrol-Paraffin).
–	A.E.76	Hot Air Elbow Retaining Screw.
3	A.E.77	Carburettor.
3	A.E.83	Carburettor Jet.
–	A.E.90	Piston—Standard.
–	A.E.90A	Piston—·020″ oversize.
–	A.E.91	Piston Ring—Standard Chromed.
–	A.E.91A	Piston Ring—·020″ oversize Chromed.
–	A.E.92	Scraper Ring—Standard.
–	A.E.92A	Scraper Ring—·020″ oversize.
–	A.E.	Piston Ring—Standard.
–	A.E.93A	Piston Ring—·020″ oversize.
7	A.E.98	Gov. Lever Connecting Link Washer.
7	A.E.99	Fan to Flywheel Fixing Screw.
–	A.E.100	Pulley Set Screw.
–	A.E.102	¼″ Brass Tee Piece (Petrol 2 Flywheel only).
–	A.E.103	¼″ x ⅛″ Brass Bush (Petrol 2 Flywheel only).
7	A.E.500	Fan Cover Assembly.
7	A.E.501	Cowling Assembly.
–	A.E.502	Piston (Standard) complete with rings, Gudgeon Pin and Retaining Springs.
–	A.E.502A	Piston (·020″ oversize) complete with rings, Gudgeon Pin and Retaining Springs.
–	A.E.503	Gov. Lever Spindle Assembly.
–	A.E.504	Fuel Pipe (Petrol-Paraffin), Carb. to 3-way tap.
–	A.E.505	Fuel Pipe (Petrol-Paraffin), L.H.
–	A.E.506	Fuel Pipe (Petrol-Paraffin), R.H.
7	A.E.507	Fuel Pipe (Petrol).
7	A.E.508	Silencer Complete.
–	A.E.509	Assembly of Petrol Tank Straps, with nuts and bolts.

When ordering Spare Parts please quote Engine Number

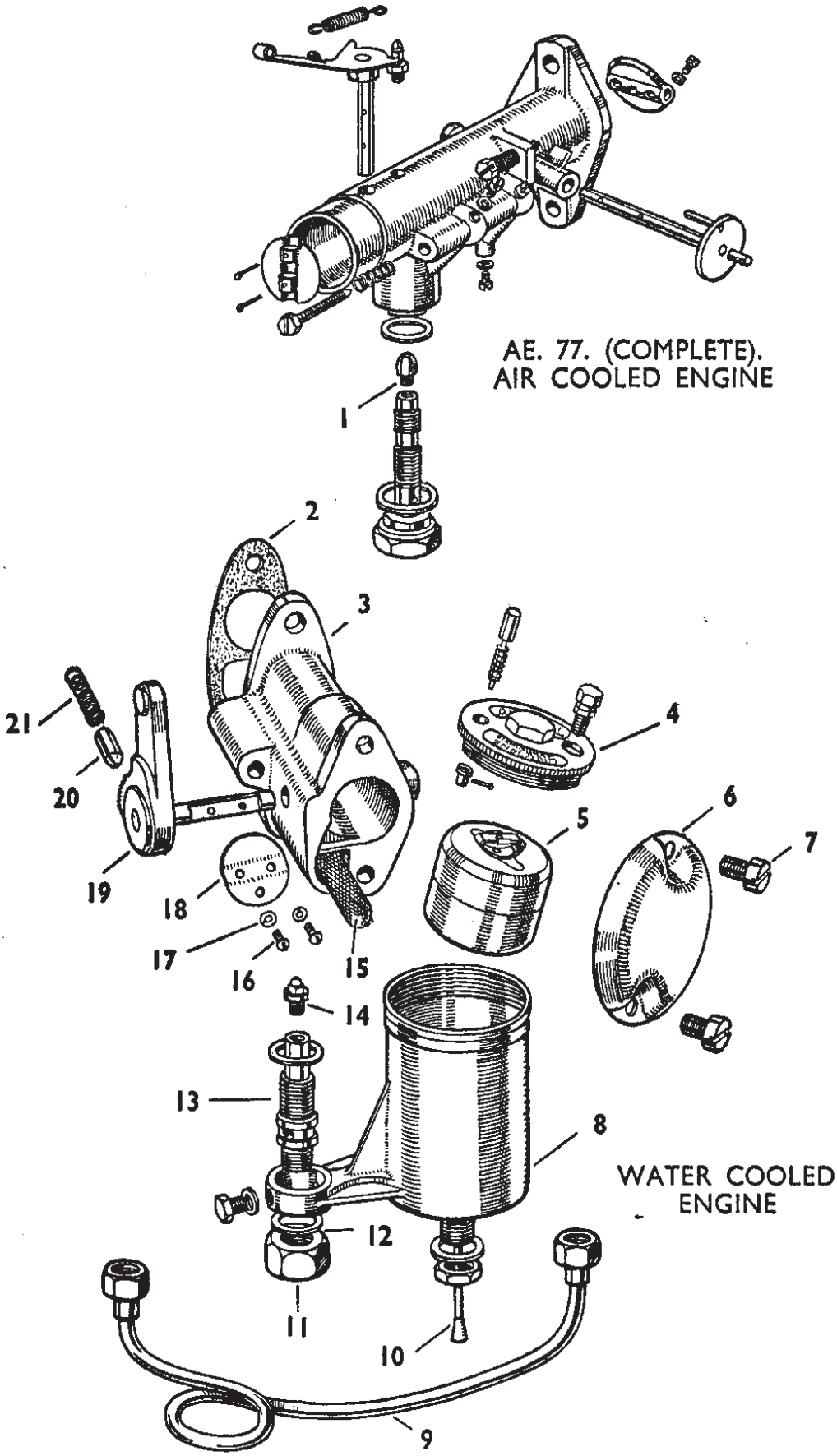

(1) AE 83	(5) WD 88A	(9) WD 144	(13) WD 87/II	(16) WD 82	(19) WD 141
(2) WD 85	(6) WD 90	(10) WD 88B	(14) WD 86	(17) WD 83	(20) WD 111
(3) WD 79	(7) WD 92	(11) WD 87A	(15) WD 84	(18) WD 114	(21) WD 112
(4) WD 88C	(8) WD 88	(12) WD 89A			

Diagram 3.

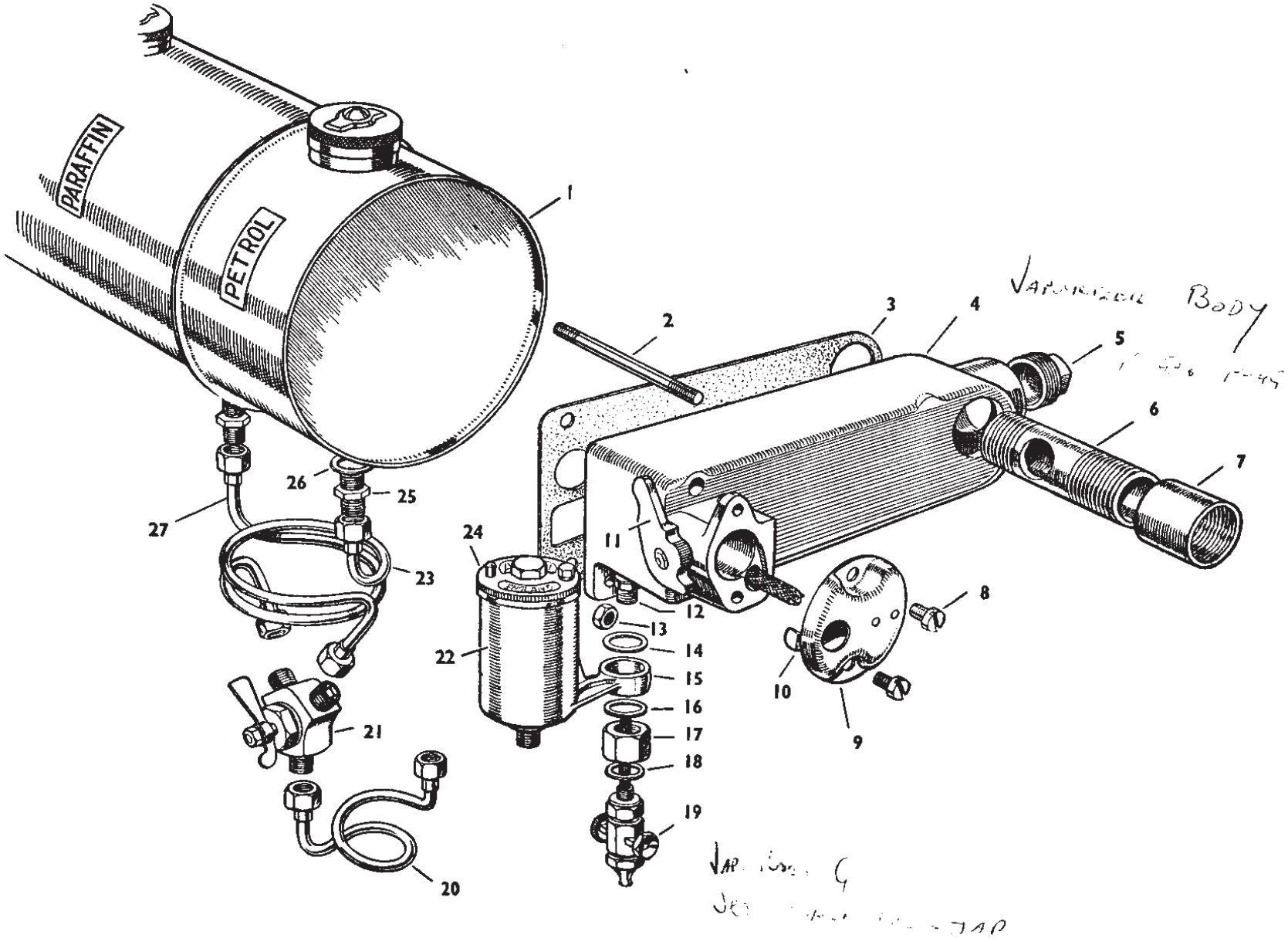

(1)	WD 400A	(5)	WD 355	(9)	WD 395	(13)	WD 491	(17)	WD 357	(21)	WD 390	(24)	WLB 88C
(2)	WD 354	(6)	WD 387	(10)	WD 352	(14)	WD 89A	(18)	WD 104A	(22)	WD 396	(25)	WD 391
(3)	WD 353	(7)	WD 382	(11)	WD 141A	(15)	WLB 88	(19)	WD 358		Complete	(26)	WD 89A
(4)	WD 351	(8)	WD 92	(12)	WD 87/II	(16)	WD 89A	(20)	WD 398	(23)	WD 625A/LH	(27)	WD 624A/LH

Diagram 4.

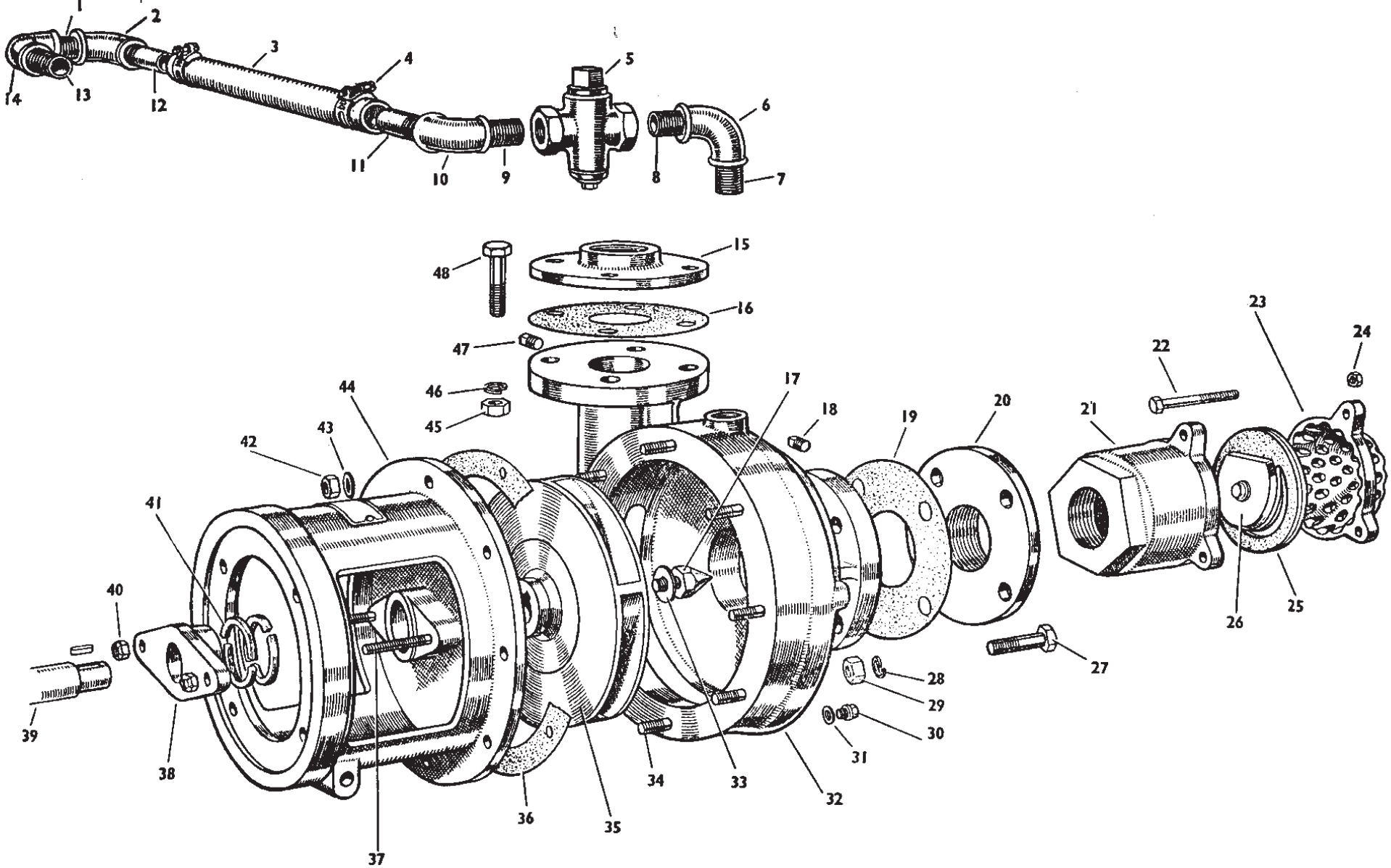

(1) WD 642
(2) WD 641
(3) WD 646
(4) WD 647
(5) WD 640
(6) WD 641
(7) WD 642
(8) WD 642
(9) WD 642

(10) WD 641
(11) WD 643
(12) WD 643
(13) WD 642
(14) WD 641
(15) 3″ S 8218
2″ S 8220
(16) 3″ S 8219
2″ S 8221

(17) PD 3971
(18) PD 4193/2
(19) S 8221
(20) S 8220
(21) S 8217
(22) S 8231
(23) S 8214
(24) S 8068
(25) S 8216

(26) S 8215
(27) S 8199
(28) S 8213
(29) S 8200
(30) PD 4193/1
(31) S 8226
(32) 3″ PD 2107/1
2″ PD 4050
(33) S 8225

(34) S 8227
(35) CF 302—PD 2090/3
CF 303—PD 2109
2″—PD 4049
2″ Pump Fittings Illustrated
2″ Pump CF 210
3″ Pump CF 302 (WD) & CF 303 (WLB)
(36) PD 4003/3

(37) S 8233
(38) PD 3031/2
(39) WD 32G/8
(40) S 8044
(41) S 8170
(42) S 8223
(43) S 8224
(44) 3″ PD 3970/2
2″ PD 3970/1

(45) S 8200
(46) S 8213
(47) PD 4193/2
(48) S 8199

Diagram 5.

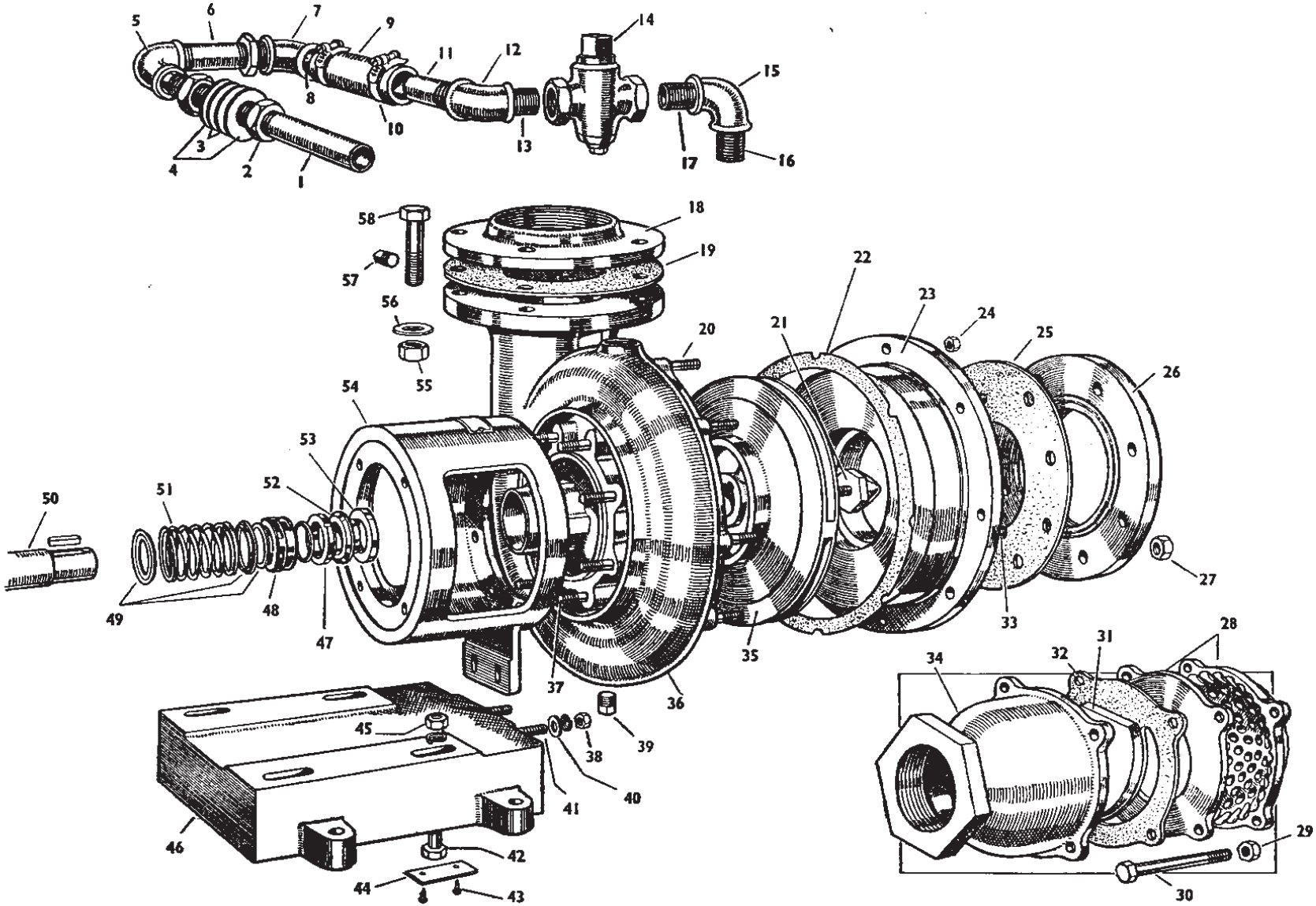

(1)	WLB 518	(10)	WD 178A	(19)	S 8203	(27)	S 8200	(35)	NR 6129	(43)	Q 369	(51)	Z 6371
(2)	WD 349	(11)	WLB 517	(20)	S 8061	(28)	S 8207	(36)	NR 6130	(44)	WLB 526	(52)	Z 6371E
(3)	WD 186/II	(12)	WLB 516	(21)	NR 6016	(29)	S 8068	(37)	S 8061	(45)	EL 8	(53)	Z 6371D
(4)	WD 187	(13)	WLB 515	(22)	NR 6090/2	(30)	S 8211	(38)	WD 10	(46)	WLB 510	(54)	NR 6170
(5)	WLB 516	(14)	WD 359	(23)	NR 6131	(31)	S 8208	(39)	S 8125	(47)	Z 6371C	(55)	S 8200
(6)	WLB 519	(15)	WLB 516	(24)	S 8062	(32)	S 8209	(40)	WD 128C	(48)	Z 6371B	(56)	S 8201
(7)	WLB 516	(16)	WLB 515	(25)	S 8205	(33)	S 8206	(41)	WD 100	(49)	Z 6371A	(57)	S 8123
(8)	WLB 517	(17)	WLB 515	(26)	S 8204	(34)	S 8210	(42)	EL 69	(50)	WLB 326/8	(58)	S 8199
(9)	WD 178/II	(18)	S 8202										

Diagram 6.

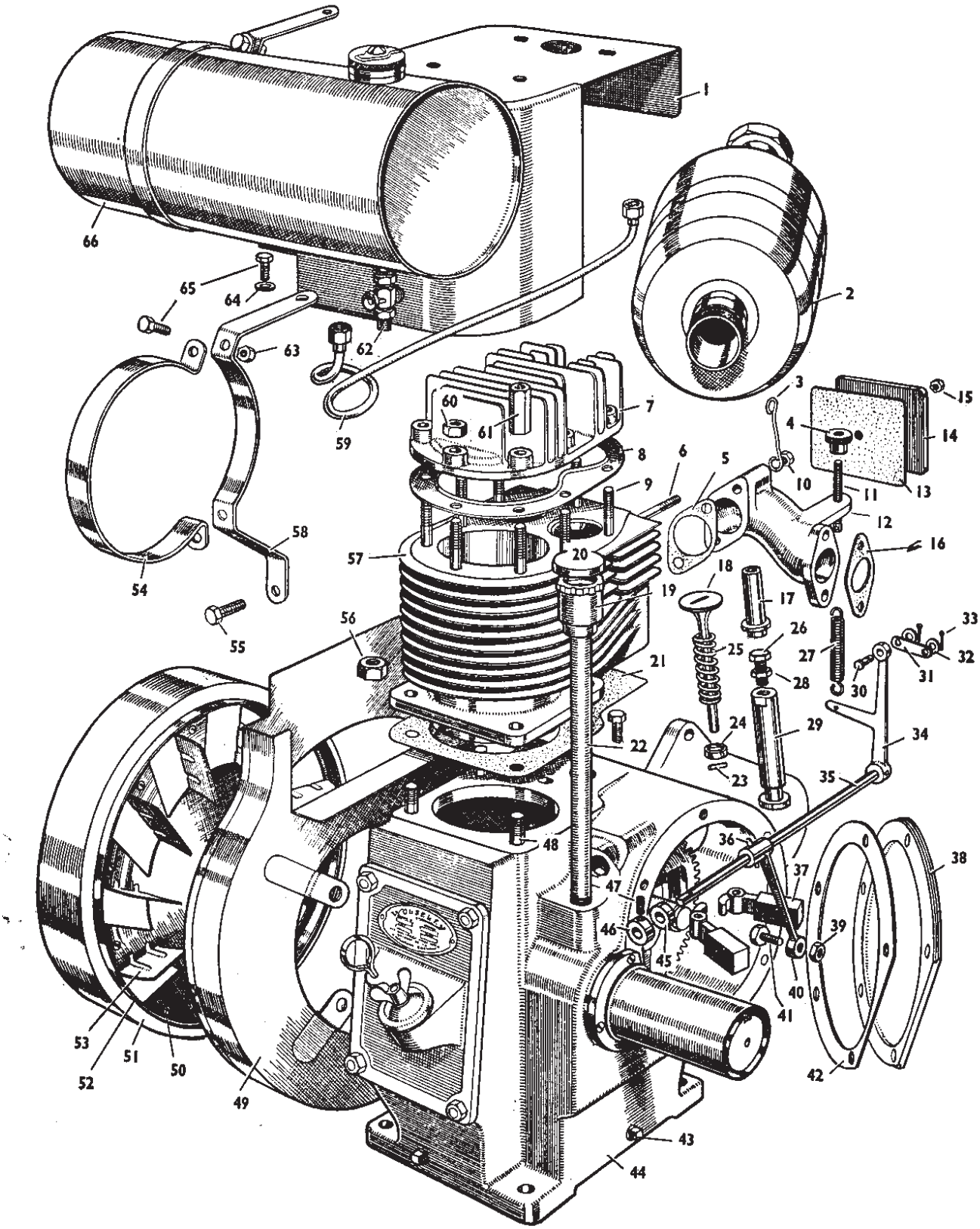

(1)	AE 501	(12)	AE 4	(24)	AE 29	(36)	AE 43	(48)	AE 41	(60)	WD 10
(2)	AE 508	(13)	AE 17	(25)	AE 61	(37)	AE 10	(49)	AE 500	(61)	AE 39
(3)	AE 74	(14)	AE 16	(26)	WD 117	(38)	WD 19/II	(50)	AE 99	(62)	WD 104
(4)	AE 33	(15)	WD 629	(27)	AE 34	(39)	WD 65A	(51)	AE 59	(63)	WD 10
(5)	AE 15	(16)	AE 26	(28)	WD 118	(40)	AE 6	(52)	AE 64	(64)	WD 128C
(6)	AE 55 (Short)	(17)	AE 42	(29)	AE 30	(41)	WD 65	(53)	AE 63	(65)	WD 108A
	AE 55A (Long)	(18)	AE 28	(30)	AE 48	(42)	WD 20/II	(54)	AE 31B	(66)	WD 494
(7)	AE 3	(19)	AE 49	(31)	AE 35	(43)	WD 16	(55)	WD 108		
(8)	AE 14	(20)	AE 52	(32)	AE 98	(44)	AE 1	(56)	WD 635		
(9)	AE 40	(21)	AE 45	(33)	WD 72	(45)	AE 23	(57)	AE 2		
(10)	WD 629	(22)	AE 50	(34)	AE 5A	(46)	AE 25	(58)	AE 31A		
(11)	AE 32	(23)	WD 78/II	(35)	AE 24	(47)	AE 44	(59)	AE 507		

Diagram 7.